Xi'an Noker Electric Co.,Ltd.

NK30E

Operation Manual

Version1.13

1、Product Description

●Built-in High-performance, Low-power Microcontroller

●Peripheral Features
- Support 4-20mA and 0-5/10V (potentiometer) two given
- Two switch inputs
- Wide Range Of Primary Loop Voltages（AC260-440V）

●Efficient cooling solution such small size, light weight

●Practical alarm function
- Phase failure
- Overheat
- Overcurrent
- Load break

●One relay output
- 3A AC250V
- 3A DC30V

●To facilitate centralized control RS485 communication

2、Size

Model	A	B	C	D	E	Install	Cooling
-25	300	154	208	120	280	7	self cooling
-45							
-100							fan cooling
-170							
-270	360	194	241	140	340	9	
-320							
-450	550	395	220	300	520	9	
-600	570	479	292	400	554	10	
-800	680	479	292	400	654	11	

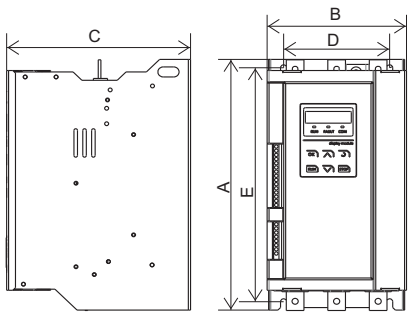

（Unit：mm）

3、Keyboard operation

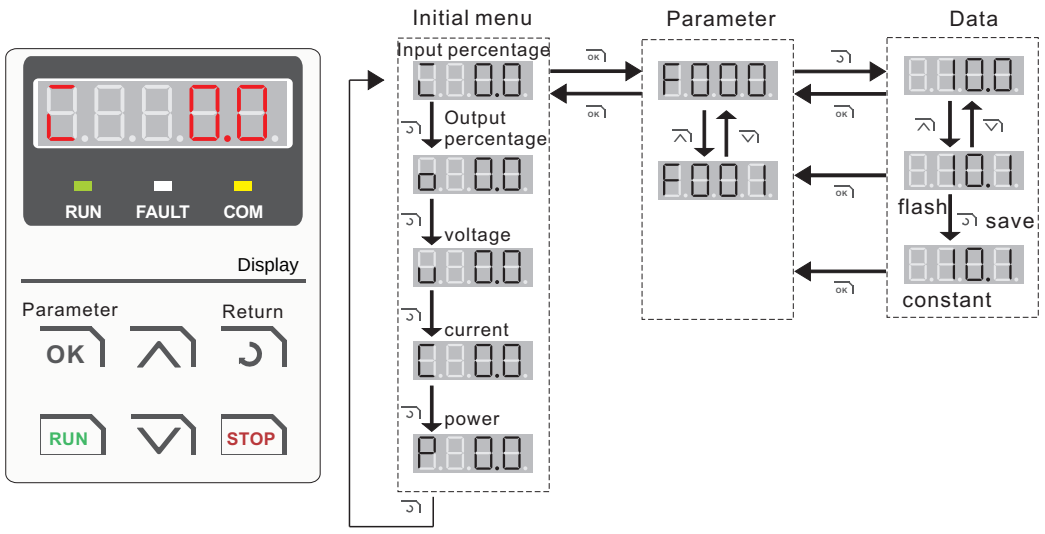

4、Terminal description

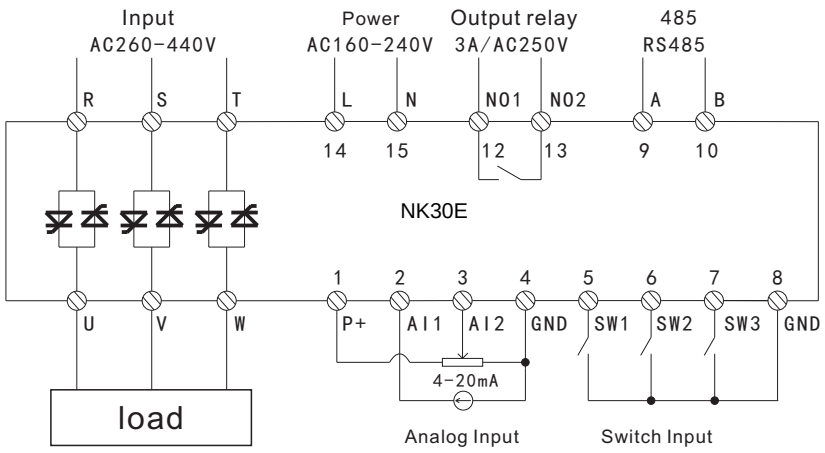

The default is stop start signal SW1, SW2 default switch between AI1 and AI2, closed AI2 given signal is valid, disconnect AI1 given signal is valid.

5、Communication

power regulator supports Modbus-RTU protocols.Modbus supports 3、4、6、16, totally 4 functions, F-35: slave station address: 1-247,F-36 baud rate:2400 4800 9600 19200 38400.F-37: data format: 8n2 8e1 8o1, 3 types.Parameter value is 16bits no signal register, decimal point is not supported.For example, before writing 56.7, it should be adjusted as 567 and then re-write.

Notice: every frame cannot exceed 20 bytes, so every frame can maximum read 10 parameters

▶ Read Holding Registers frame format

0	1	2	3	4	5	6	7
Addr	Function 03H	Starting Address Hi	Starting Address Lo	No. of Points Hi	No. of Points Lo	CRC H	CRC L

▶ Preset Single Register frame format

0	1	2	3	4	5	6	7
Addr	Function 06H	Starting Address Hi	Starting Address Lo	Preset Data Hi	Preset Data Lo	CRC H	CRC L

6、Fault and maintenance

1、Fault list

fault code	description
E002	Main power fault, possible fault reason: 1、No voltage of mail loop or not the same of nameplate. 2、Synchronous cable of terminal 12 is not connected, please refer to the wiring drawing.
E003	Overcurrent, measured current exceeds 1.25 time of rated current,possible reason: 1、Load changes rapidly or short-circuit. 2、Thyristor breaks.
E004	Load-off, load off current = set-point percentage * rated current * load threshold, alarms when difference between set-pint and measured current is bigger than load off current. Possible reason: 1、Load off 2、Load current is small 3、Setting of(F-53)is small
E005	Overheat of regulator, heat-sink temperature is bigger than 85, possible reason: 1、Ambient temperature is higher than 45. 2、Fan breaks. 3、Dust on the ventilation path.

7、basic parameter

Above chapter is the brief operation parameter, R: readable parameter,RW: readable and writeable parameter.Please change parameter when regulator stops.

parameter no.	description	range	default	Attributes &Register	
F-000	Valid output	0-100.0 [%] 0.1%	-	R	0
F-001	Valid input	0-100.0 [%] 0.1%	-	R	1
F-002	Output voltage	0-3000.0 [V] 0.1V	-	R	2
F-004	A phase Output current	0-3000.0 [A] 0.1A	-	R	4
F-005	B phase Output current	0-3000.0 [A] 0.1A	-	R	5
F-006	C phase Output current	0-3000.0 [A] 0.1A	-	R	6
F-007	Output power	0-3000.0 [KW]0.1KW	-	R	7
F-008	status: switch off 1: switch on	0-1	0	R	8
F-009	Digital setting signal input	0-100.0 [%] 0.1%	0	RW	9
F-010	Start-stop control mode selection 0：External switch 1：panel	0-1	0	RW	10
F-011	Given signal type selection 0：Analog 1：Digital	0-1	0	RW	11
F-012	analog type 0：AI1 0-20mA/AI2 0-5V 1：AI1 4-20mA/AI2 0-5V 2：AI1 4-20mA/AI2 0-5V Integrated slope control 3：AI1 4-20mA/AI2 0-10VIntegrated slope control 4：AI1 0-20mA/AI2 0-10V 5：AI1 4-20mA/AI2 0-10V	0-2	1	RW	12
F-013	Ramp-up time Signal processing before the ramp from 0.0% to 100% of the time required	0-120	2	RW	13
F-014	Ramp-down time Before the ramp signal processing dropped from 0.0% to 100% of the time required	0-120	2	RW	14
F-015	Output ceiling Maximum output limit	0-100.0 [%] 0.1%	100	RW	15
F-016	Output limit Output minimum value	0-100.0 [%] 0.1%	0	RW	16
F-017	Proportion PID control proportional factor	0-200	80	RW	17
F-018	Integral PID control integral time	0-200	5	RW	18
F-019	Differential PID control differential time	0-200	0	RW	19
F-020	Feedback signal 0：Voltage 1：current 2：power	0-2	0	RW	20
F-021	Limiter signal source 0：Voltage 1：Current	0-1	1	RW	21
F-022	Limit percent Set as a percentage of the limit signal	0-100.0 [%] 0.1%	100	RW	22
F-023	Control mode 0：Closed-loop phase shift 1：Open loop phase shift 2：Zero trigger 3:CM Mode	0-3	0	RW	23
F-027	AI1 end correction This parameter is set so that 20mA corresponds to a given input 100%	50-150.0 [%] 0.1%	100	RW	27
F-029	AI2 end correction This parameter is set so that 5V or 10V corresponds to a given input 100%	50-150.0 [%] 0.1%	100	RW	29
F-030	Power allocation amount	2-100	10	RW	30
F-031	Zero trigger cycle 0：2S 1：4S 2：8S	0-2	0	RW	31
F-032	CM Control mode 0：time 1：Swith	0-1	0	RW	32
F-033	save	0-1	0	RW	33
F-034	CM Switch time From the run started to set a time switch from phase shift to zero	0-6000 [M] 1M	120	RW	34
F-035	Device Address This parameter sets the Modbus address	0-247	2	RW	35
F-036	Baud Rate 0：2400 1：4800 2：9600 3：19200 4：38400	0-4	2	RW	36
F-037	Data format 0：8n2 Date bit 8 bits, no calibration, 2 stop bits 1：8e1 Date bit 8 bits, parity - checking, 1 stop bits 2：8o1 Date bit 8 bits, odd parity -checking, 1stop bits	0-2	1	RW	37
F-038	Analog output 1th (0:NO 1:input signal 2:Output percentage 3:Output voltage 4:A Phase current 5:B Phase current 6:C Phase current 7:Output power)	0-7	3	RW	38
F-039	Analog output 2th	0-7	4	RW	39
F-040	Analog output 3th	0-7	5	RW	40
F-041	Analog output 4th	0-7	6	RW	41
F-042	Analog output 1th signal type 0：0-20mA 1：4-20mA	0-1	1	RW	42
F-043	Analog output 2th signal type 0：0-20mA 1：4-20mA	0-1	1	RW	43
F-044	Analog output 3th signal type 0:0-20mA 1:4-20mA	0-1	1	RW	44
F-045	Analog output 4th signal type 0:0-20mA 1:4-20mA	0-1	1	RW	45
F-046	Programmable port SW3 0:NO 1:Run 2:Fault 3:External fault 4:Scram 5：CM Switch 6：C phase stop output	0-6	1	RW	46
F-048	Output relay 0：Fault 1：Start status	0-1	0	RW	48
F-049	Previous fault	0-100	0	R	49
F-050	Allow overcurrent protection 0：Disable 1：Enable	0-1	1	RW	-
F-051	Phase protection permit 0：Disable 1：Enable	0-1	1	RW	-
F-052	Phase protection permit 0：Disable 1：Warning 2：Warning+Stop	0-2	1	RW	-
F-053	Load-off threshold	10-70 [%] 1%	70	RW	-
F-054	Thyristor thermal protection allows 0：Disable 1：Enable	0-1	1	RW	-
F-055	Extend the functionality 0：No 1：Analog output	0-1	1	RW	-
F-056	Rated voltage :The same as nameplate. Data can be changed according to actual load, for the purpose of protecting device Notice: cannot exceed nominated value on the nameplate	0-3000 [V] 1V	380	RW	56
F-057	Rated current:The same as nameplate. Data can be changed according to actual load, for the purpose of protecting device Notice: cannot exceed nominated value on the nameplate	0-3000 [A] 1A	-	RW	57
F-058	Frequency 0：50HZ 1：60HZ 2：Automatic tracking	0-2	0	RW	58